Today in Astronomy 111: thermal structure of planetary atmospheres

- Hydrostatic equilibrium
- Convection
- Convection in gases is adiabatic
- Convection zones
- Temperature profiles of planetary atmospheres: tropospheres are convection zones
- Escape of lightweight molecules from planets, or heavier molecules from lightweight planets

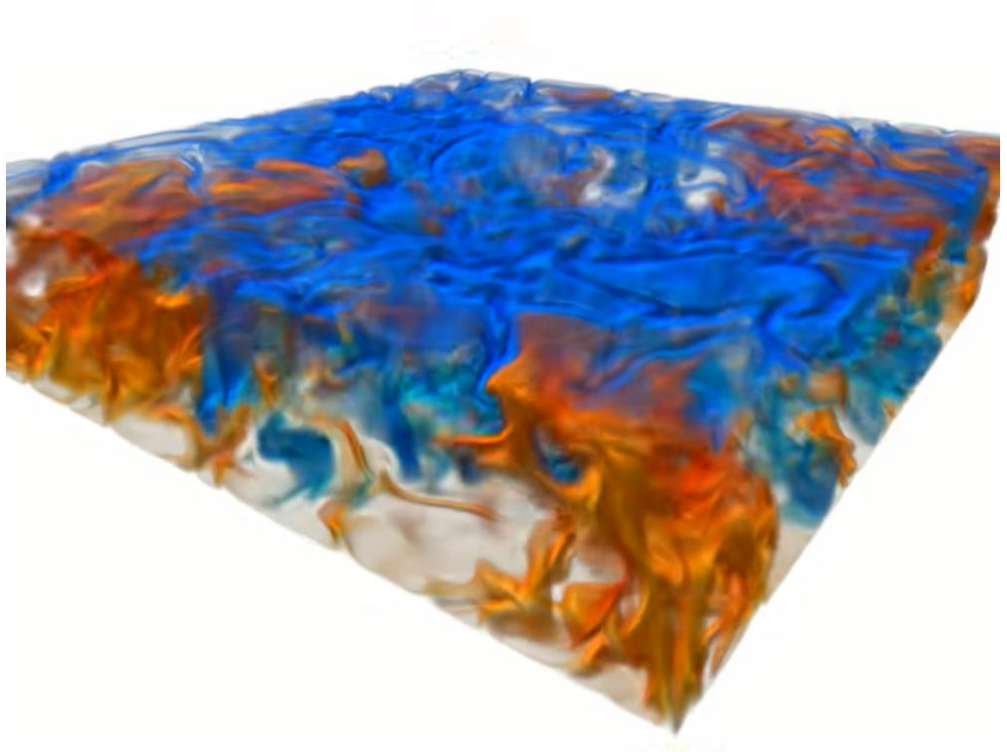

Simulation of convection between two uniform-temperature planes, the lower one warmer. From the Physics of Fluids group, U. Twente.

Hydrostatic equilibrium

If a parcel of air – or a liquid or solid, within a planet's interior – does not move vertically (or radially), the pressures from gravity and pressure are balanced, a condition called **hydrostatic equilibrium**.

- Consider an infinitesimally thin slab with altitude *z* thickness *dz*, area *S*, and uniform density *ρ*.
- Forces are exerted on it by gravity (*mg*, its own weight) and by pressure of the air above $\left(P\left(z+dz\right)S\right)$ and below $\left(P\left(z\right)S\right)$.
  - Pressure = force per unit area. Units: dyne cm^{-2}.

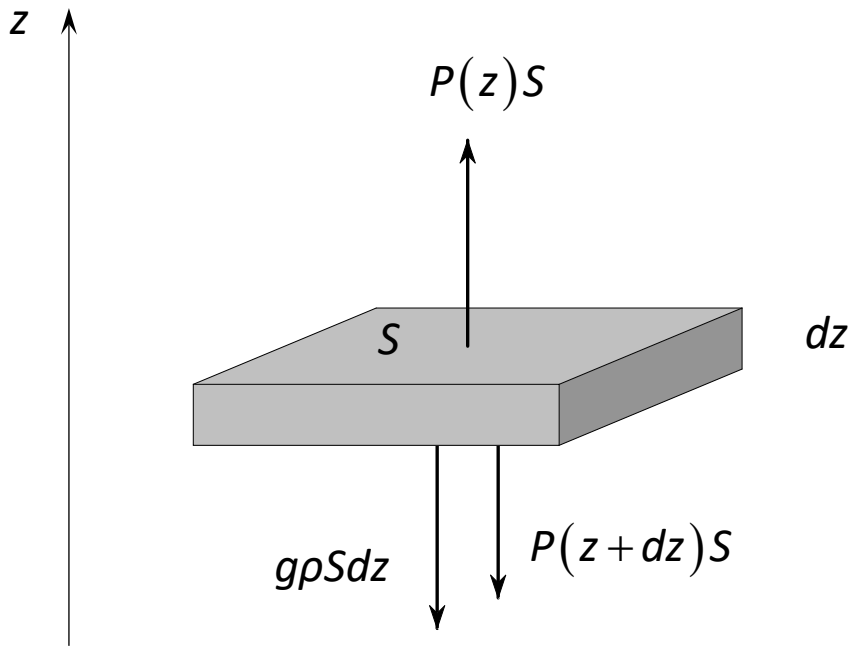

g = gravitational acceleration

Hydrostatic equilibrium (continued)

- In one dimension (i.e. as drawn):

$$P(z)S = g\rho S dz + P(z+dz)S = g\rho S dz + \left[P(z) + \frac{dP}{dz} dz \right] S$$

$$\boxed{\frac{dP}{dz} = -\rho g}$$

Equation of hydrostatic equilibrium

- In spherical symmetry, we would also get

$$\frac{dP}{dr} = -\rho g \quad ,$$

but mostly we will deal with atmospheres in **thin**, plane-parallel layers, in Cartesian coordinates.

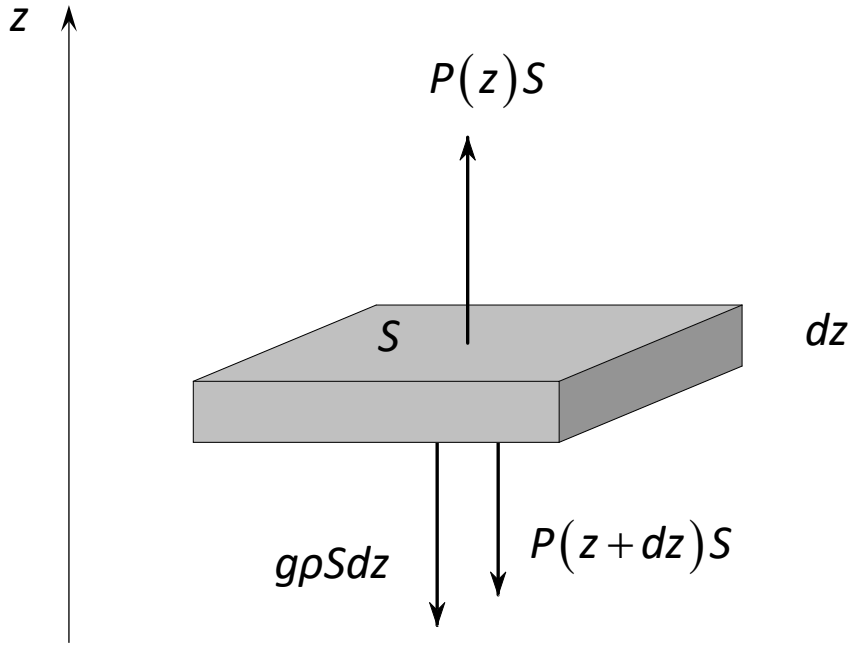

The ASTR 111 calculus palette, page 2

Product rule: $$\frac{d}{dx}\left[u(x)v(x)\right] = v(x)\frac{du}{dx} + u(x)\frac{dv}{dx}$$

Integration by parts: $$\int_a^b u(x)dv = u(x)v(x)\Big|_a^b - \int_a^b v(x)du$$

$$\frac{d}{dx}x^n e^{-x} = \left(\frac{n}{x} - 1\right)x^n e^{-x} \quad \Leftrightarrow \quad \int_a^b x^n e^{-x}dx = a^n e^{-a} - b^n e^{-b} + n\int_a^b x^{n-1}e^{-x}dx$$

$$\Leftrightarrow \quad \int_0^\infty x^n e^{-x}dx = n!$$

$$\frac{d}{dx}\ln(x) = \frac{1}{x} \quad \Leftrightarrow \quad \int_a^b \frac{dx}{x} = \ln b - \ln a = \ln\left(\frac{b}{a}\right)$$

In these equations, *x* is a variable, *u* and *v* are differentiable functions of a single variable, and *a* and *b* are constants.

There is nothing special about the use of *x* in these equations. We could just as well use *y* or *z* instead.

Or *t*, or *r*, or ϑ, or φ.

Exponential atmospheres and the scale height

Suppose that the atmosphere is

- plane-parallel: that is, thin compared to the radius of the planet's surface;
- made of an **ideal gas**; that is

$$\left.\begin{aligned} P &= nkT \\ &= \frac{\rho kT}{\mu} \end{aligned}\right\} \quad \begin{cases} n = \text{ molecules per unit volume} \\ \mu = \text{average mass of molecules in the atmosphere} \\ k = 1.381 \times 10^{-16} \text{ erg K}^{-1} \text{ (Boltzmann constant)} \end{cases}$$

- has uniform temperature (is **isothermal**).

Then

$$\frac{dP}{dz} = -\frac{\mu P}{kT} g \quad .$$

Exponential atmospheres and the scale height (continued)

- Rearrange and integrate from $z = 0$ to some arbitrary height z:

$$\int_{P_0}^{P(z)} \frac{dP'}{P'} = -\frac{\mu g}{kT}\int_0^z dz'$$

Consult Calculus Palette page 2

$$\ln P(z) - \ln P_0 = -\frac{\mu g}{kT} z$$

$$P(z) = e^{\left(\ln P_0 - \frac{\mu g}{kT} z\right)} = P_0 e^{-z/(kT/\mu g)}$$

$$= P_0 e^{-z/H}$$

Isothermal, exponential atmosphere

where ***H = kT/μg,*** the **isothermal scale height**, is the vertical distance over which pressure changes by 1/*e*.

Scale heights for planetary atmospheres

- Oddly, the scale heights of the atmospheres for terrestrial and giant planets are not hugely different …
- … even though densities, pressures, temperatures, and planetary masses differ by many orders of magnitude.
  - Typical values are in the tens of km.
  - This indeed is small enough compared to the planetary radii that the plane-parallel approximation is a good one for at least a few scale heights.

Planet	Isothermal scale height (km)
Venus	15.9
Earth	8.5
Mars	11.1
Jupiter	27
Saturn	59.5
Uranus	27.7
Neptune	20

Energy transport, again: buoyancy and convection

As mentioned last week, energy is transported by radiation, conduction and convection. We have discussed radiation transport and conduction. What about convection?

- Convection is the transport of energy due to density differences when not in a free-fall (microgravity) environment.
  - If a bubble of liquid or gas is heated it expands and becomes less dense, til its pressure equals that of its surroundings.
  - Lower density makes it **buoyant**.
  - The force of buoyancy is given by **Archimedes's Principle:**

$$F_b = m_b g - m_{\text{displaced}} g$$

$$= \rho_b V_b g - \rho V_b g = (\rho_b - \rho) V_b g$$

  - Rising material will eventually blend with the surrounding environment, thus dissipating its extra heat.

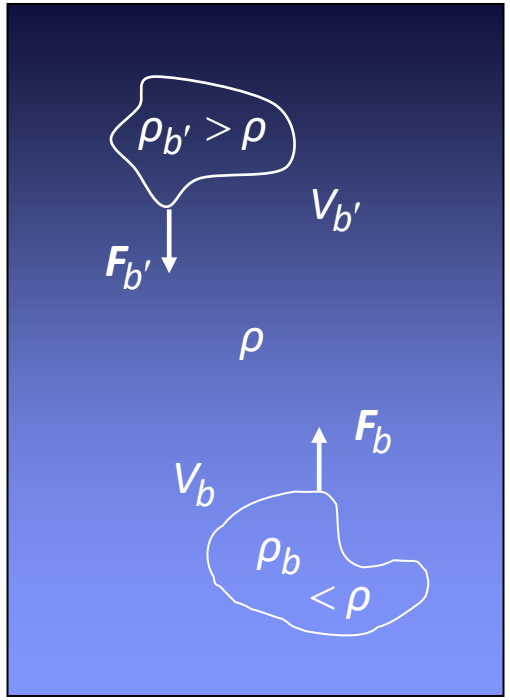

Convection (continued)

- Cooler-than-average bubbles in the upper layer will sink, eventually blend with the surroundings, and soak up heat.
- Buoyancy is a force, so the rising or sinking of a bubble can accelerate to fairly large speed.
- Being fast, bubbles can transport their heat **without exchanging much of it with the surroundings** along the way.
  - If the heat exchange were **zero**, this would be an **adiabatic** process. We assume it's adiabatic, to good approximation.
- Rising and sinking bubbles, comprising a **circulation** of heat between two surfaces, is called a **convection zone**, and this process of heat transfer is what we call convection.
- **Convection is quite a bit more efficient at transferring heat than conduction.**

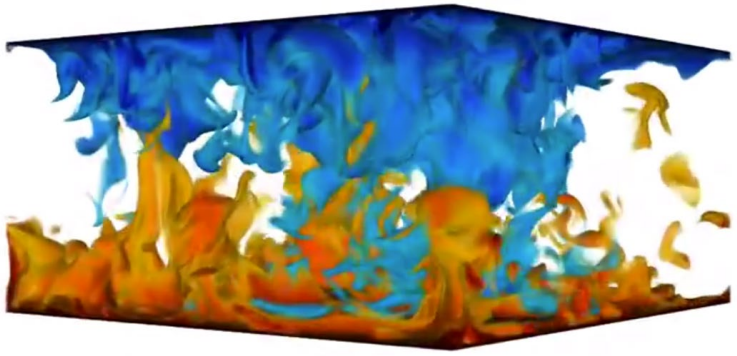

Simulation of convection between two uniform-temperature planes, the lower one warmer. From the Physics of Fluids group, U. Twente.

Adiabatic processes

The first law of thermodynamics (conservation of energy) is written for a **system** – by which we mean a well-defined parcel of gas, such as a convecting bubble or droplet – as

$dQ = dE + PdV$, where

dQ is the heat absorbed by the system from its surroundings,

dE is the change in internal energy, and

PdV is the work done on the system by its surroundings.

- If a change in energy of the system is made without the flow of heat (that is, **adiabatically**), then

$$dE = -PdV \quad .$$

- If the system is an ideal gas, with N molecules and volume V, then

$$P = nkT \quad \Rightarrow \quad PV = NkT \quad \Rightarrow \quad PdV + VdP = NkdT \quad .$$

Adiabatic processes (continued)

- Two of the derivatives that can be formed from all these terms have special names and roles:

$$C_V \equiv \left.\frac{dQ}{dT}\right|_{dV=0} = \left.\frac{dE}{dT}\right|_{dV=0}$$

Heat capacity (= specific heat) at constant volume

$$C_P \equiv \left.\frac{dQ}{dT}\right|_{dP=0} = C_V + Nk$$

Heat capacity at constant pressure

$$\gamma \equiv \frac{C_P}{C_V}$$

Specific-heat ratio, a.k.a. **adiabatic index**

- With these, $dT = \frac{dE}{C_V} = -\frac{PdV}{C_V}$ for an adiabatic process.

The specific-heat ratio, γ, for atoms and molecules

In PHYS 227 you will see the following simple rule demonstrated for the specific heats in pure, ideal gases:

$$C_V = j\frac{k}{2}, \text{ where}$$

$$j = \begin{cases} \text{number of } \textbf{mechanical degrees of freedom} \\ \text{that can be excited efficiently at a given } T \end{cases}$$

$$\text{But } C_P = C_V + k, \quad \text{so} \quad \gamma = \frac{C_V + k}{C_V} = \frac{j\frac{k}{2} + k}{j\frac{k}{2}} = \boxed{\frac{j+2}{j}} .$$

Gas	**Mechanical motions**	**Degrees of freedom**	***γ***
Monoatomic gas: He	Translation (*x, y, z*)	3	5/3
Warm diatomic gas: H_2, $T > 300$ K	Translation, rotation in two angles	5	7/5
Warm triatomic gas: CO_2, $T > 500$ K	Translation, bend, rotation in three angles	7	9/7
Hot triatomic gas: CO_2, $T > 750$ K	Translation, bend, two stretches, three angles	9	11/9

Adiabatic processes (continued)

- Thus,

$$PdV + VdP = -\frac{Nk}{C_V} PdV$$

$$-VdP = \left(1 + \frac{Nk}{C_V}\right) PdV = \left(\frac{C_V + Nk}{C_V}\right) PdV = \gamma PdV$$

$$-\frac{dP}{P} = \gamma \frac{dV}{V}$$

- This is easy to integrate, to obtain a relation between pressure and volume for finite differences:

$$-\int_{P_0}^{P} \frac{dP'}{P'} = \gamma \int_{V_0}^{V} \frac{dV'}{V'} \quad \Rightarrow \quad -\ln P + \ln P_0 = \gamma\left(\ln V - \ln V_0\right)$$

$$e^{\ln P + \gamma \ln V} = e^{\ln P_0 + \gamma \ln V_0} \quad \Rightarrow \quad \boxed{PV^{\gamma} = P_0 V_0^{\gamma} = \text{constant.}}$$

Adiabatic process in an ideal gas

Convection zones in atmospheres

How does *T* depend on *P* in an atmosphere, if heat transfer is adiabatic?

- Use the ideal gas law to eliminate *V* from the expression we just derived:

$$PV^{\gamma} = P_0 V_0^{\gamma}$$

$$P\left(NkT/P\right)^{\gamma} = P_0\left(NkT_0/P_0\right)^{\gamma}$$

$$P^{1-\gamma}\left(Nk\right)^{\gamma} T^{\gamma} = P_0^{1-\gamma}\left(Nk\right)^{\gamma} T_0^{\gamma}$$

$$PT^{\gamma/(1-\gamma)} = P_0 T_0^{\gamma/(1-\gamma)} = \text{constant} \equiv D$$

- Then differentiate and substitute, to obtain a differential relationship:

$$\frac{dP}{dT} = D\frac{d}{dT}\left(T^{-\gamma/(1-\gamma)}\right) = -\frac{\gamma}{1-\gamma} DT^{-\gamma/(1-\gamma)-1} = \boxed{\frac{\gamma}{\gamma-1}\frac{P}{T}}$$

Dry adiabatic lapse rate

Convection zones (continued)

- It turns out that we can get a relation between T and the altitude z from this, by using the chain rule and hydrostatic equilibrium…

$$\frac{dP}{dz} = \frac{dP}{dT}\frac{dT}{dz} = \frac{\gamma}{\gamma - 1}\frac{P}{T}\frac{dT}{dz} = -\rho g$$

- and by using the ideal gas law, $P = \rho kT/\mu$, to eliminate P and ρ in favor of the mean molecular mass μ:

$$\frac{dT}{dz} = -\frac{\gamma - 1}{\gamma}\frac{\rho T g}{P} = -\frac{\gamma - 1}{\gamma}\frac{NkT}{PV}\frac{\mu g}{k}$$

$$= -\frac{\gamma - 1}{\gamma}\frac{\mu g}{k}$$

From here a simple integral gives $T(z)$.

Convection zones (continued)

- For fixed composition and low altitude $(z \ll R, g \cong GM/R^2)$, the integral is trivial:

$$\int_0^z \frac{dT}{dz'} dz' = -\frac{\gamma - 1}{\gamma} \frac{\mu g}{k} \int_0^z dz'$$

$$\boxed{T(z) - T(0) = -\frac{\gamma - 1}{\gamma} \frac{\mu g}{k} z}$$

Convective atmospheric zone

***T* decreases linearly as *z* increases, in convection zones.**

- If the composition – and therefore μ and γ – changes with height z, the dependence of T on z gets correspondingly more complicated.

- Nevertheless, when T is observed to vary linearly with z, it's a strong indication that this part of the atmosphere is a convection zone: heat is transported predominantly by convection.

Vertical structure of Venus's atmosphere

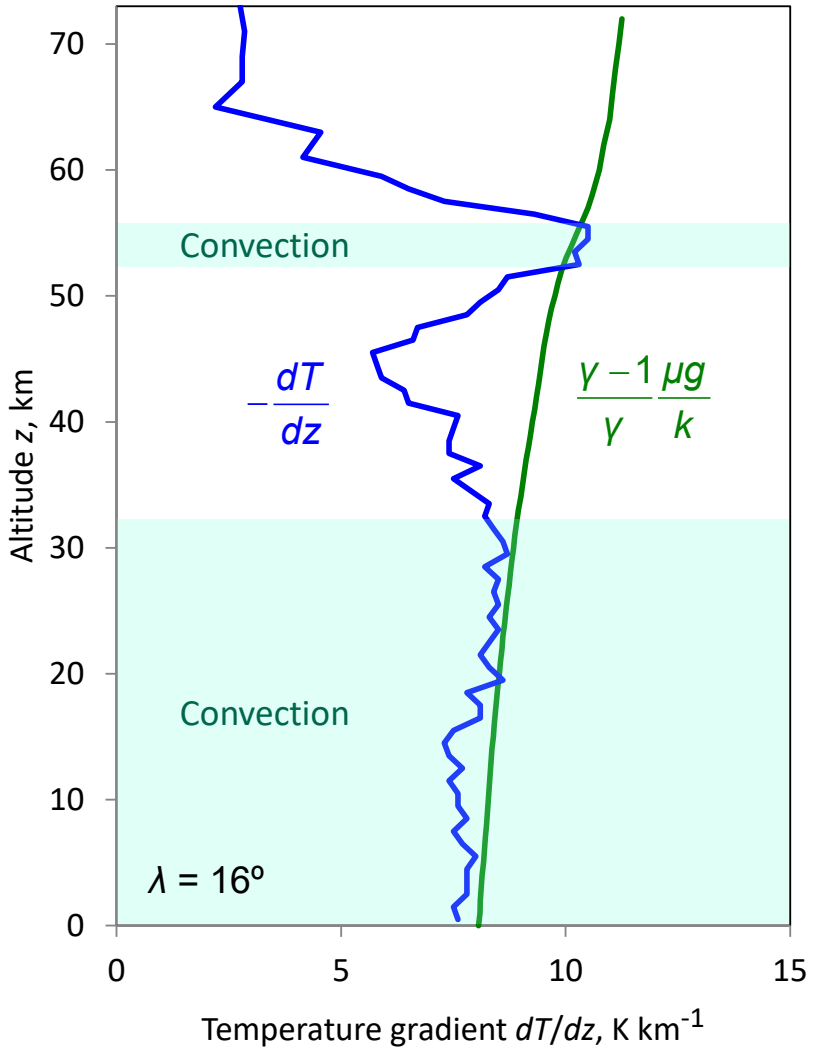

The simplest atmosphere in the Solar system.

- CO_2, with $\mu = 44u = 7.31\times10^{-23}$ gm, is the predominant molecule until well above the clouds.
- For CO_2, $\gamma = 11/9$ at the 737 K temperature of Venus's surface, declining to 9/7 by $z = 50$ km where $T = 350$ K.
- This leads to values of $-(\gamma - 1)\mu g/\gamma k$ which match measurements of dT/dz well, for z = 0-32 km and 51-56 km: two convection zones.

Data from VIRA (Seiff et al. 1985)

Vertical structure of Venus's atmosphere (continued)

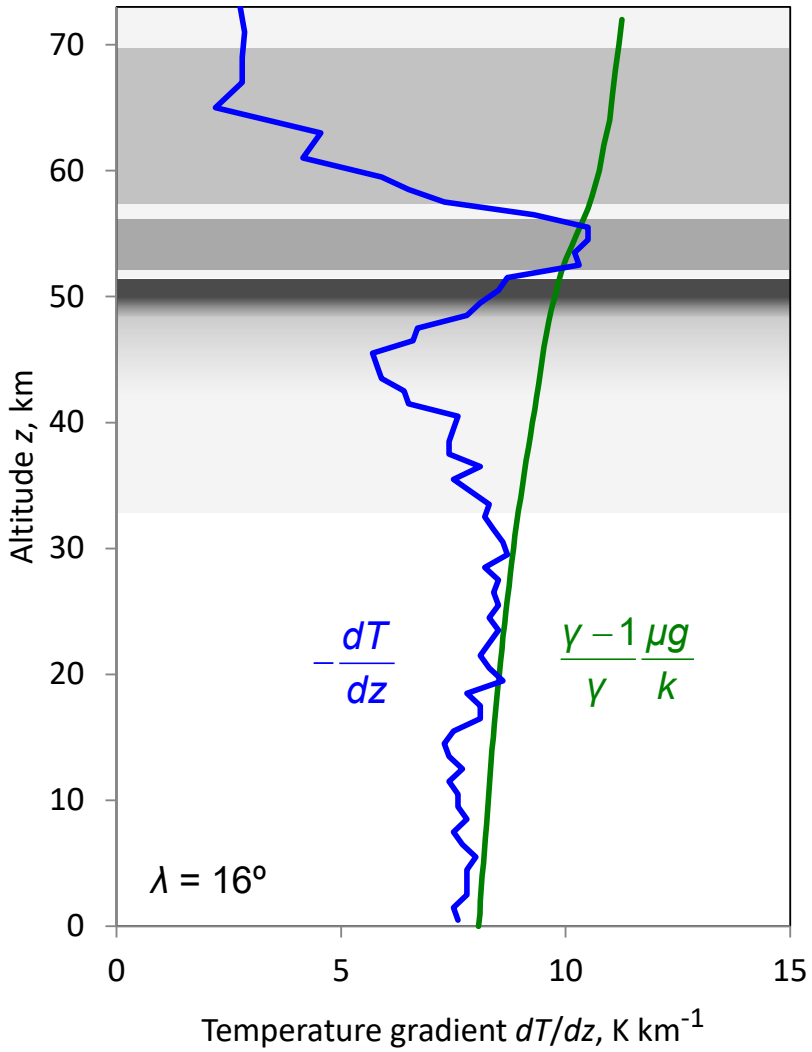

- The Venera and Pioneer landers passed through three cloud layers, distinguished both by altitude and by droplet size (Titov et al. 2018).
- The clouds themselves are droplets made mostly of liquid H_2SO_4 (Young 1973).
- The lowest cloud layer, near z = 50 km altitude, is the thinnest (in altitude) and the most opaque.
- Below, above, and between the cloud decks lie thin hazes of droplets, extending to about z = 32 km altitude below and about 110 km altitude above the clouds.

Data from VIRA (Seiff et al. 1985)

Vertical structure of Venus's atmosphere (continued)

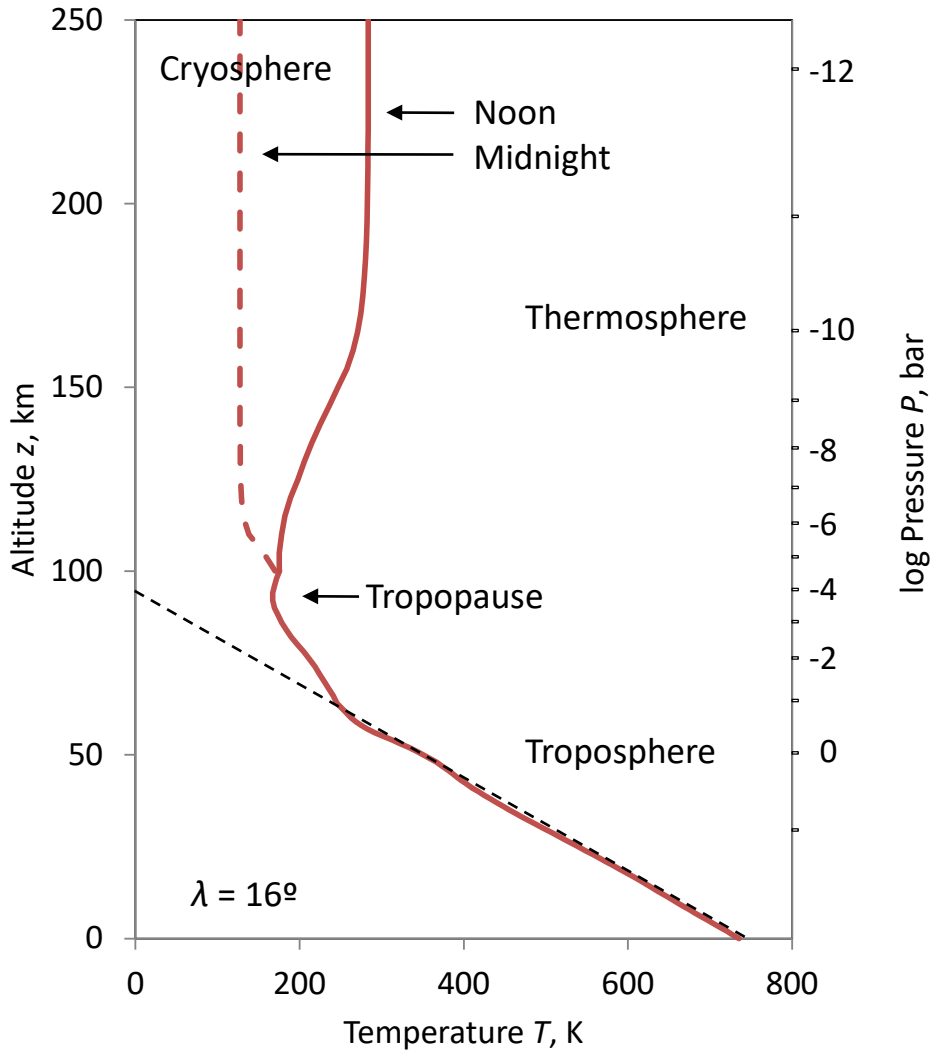

- Radiation and conduction take over the heat transport above about 60 km altitude, resulting in a minimum in the temperature.
- When temperature switches from increasing to decreasing or *vice versa*, we call it a **thermal inversion**.
- This particular inversion is called the **tropopause**; below lies the **troposphere**, above the **thermosphere**.
- The thermosphere has a substantial day/night (**diurnal**) temperature difference.
- Note again the pressure units:

$$1 \text{ bar} = 10^6 \text{ dyne cm}^{-2}$$

1 atmosphere = 1.013 bar

Data from VIRA (Seiff et al. 1985, Keating et al. 1985)

Vertical structure of Earth's atmosphere

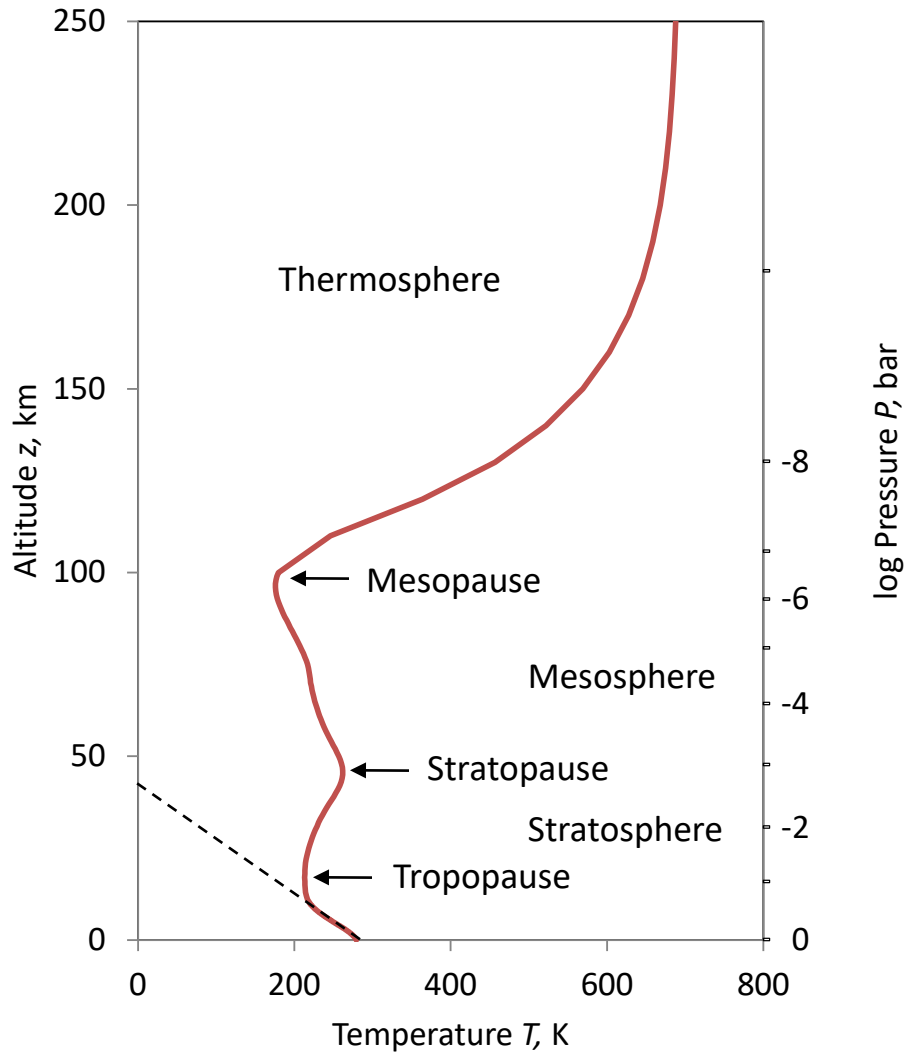

- Dominated by N_2, so $\gamma = 7/5$ for most of it.
- As on Venus, the lowest layer – the troposphere – is convective.
- Above the troposphere, the temperature increase in the **stratosphere** is caused by an increase in ozone (O_3) concentration.
- Ozone is produced by solar UV from oxygen:

$$2O_2 + h\nu \rightleftarrows O + O_3$$

and in turn strongly absorbs more ultraviolet radiation.

Data from the MSIS-E-90 atmospheric model.

Vertical structure of Jupiter's upper atmosphere

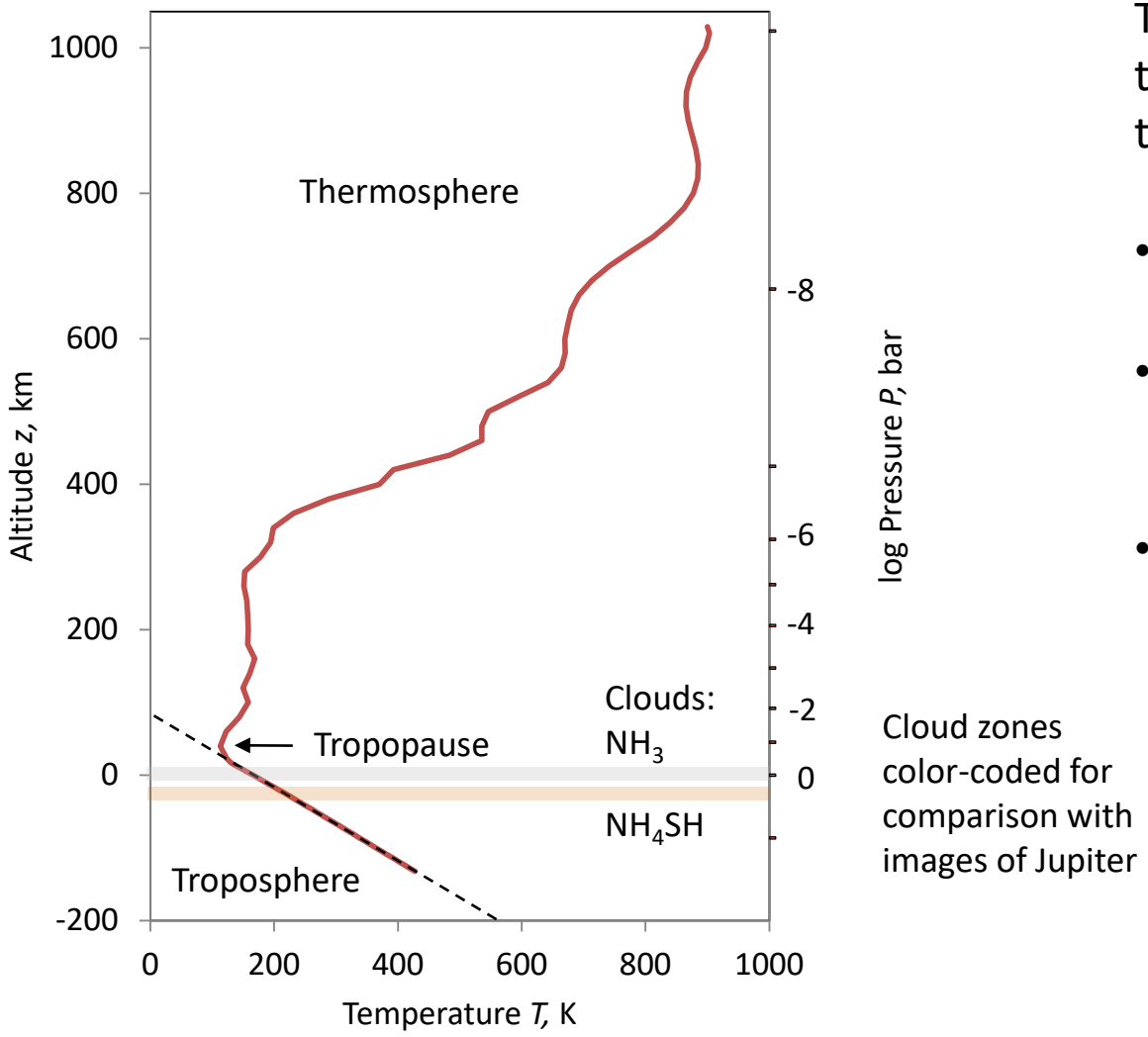

Cloud zones color-coded for comparison with images of Jupiter

The parachute probe dropped by Galileo measured thermodynamic parameters as functions of altitude, here taken to be height above the P = 1 bar level.

- Again, a convective troposphere.
- Gas dominated by H_2 which is cold at the top ($\gamma = 5/3$) but gets warm quickly at lower altitudes ($\gamma < 5/3$).
- Nearly isothermal strato-mesosphere.

Data from Seiff et al. 1998.

Atmospheric escape of lightweight molecules

A molecule can escape from an atmosphere if its kinetic energy exceeds the gravitational binding energy of the planet, and if it moves on an upward trajectory without intersecting another particle.

- The region from which molecules escape is called the **exosphere**.
  - Topmost layer of the atmosphere, from outer space down to the point at which the mean distance travelled by a molecule before colliding, called the **mean free path**, begins to decrease significantly with increasing altitude.
- For molecular mass *m*, exosphere temperature *T*, planetary mass *M* and radius *R,* the characteristic time it takes a molecule to escape a planet's gravity is

$$\tau \cong \sqrt{\pi}\left(\frac{kT}{2m}\right)^{\frac{3}{2}} \frac{R^3}{(GM)^2} e^{GMm/kTR}$$

Jeans escape timescale

Atmospheric escape of lightweight molecules (continued)

- Compare Earth's exosphere (T = 600 K) to Saturn's (160 K), for three ordinary lightweight species:

Jeans escape time τ, years	Earth	Saturn
H_2	9.7×10^{3}	1.9×10^{405}
He	2.6×10^{14}	3.0×10^{812}
N_2	5.4×10^{142}	2.9×10^{5741}
Age of Solar system	4.6×10^{9}	
Age of Universe	1.4×10^{10}	

- No wonder Earth and Venus have no hydrogen except what's bound in heavier molecules, why low mass planets (e.g. asteroids) have practically no atmosphere, and why the gas-giant planets are hydrogen-dominated.

Maxwell-Boltzmann speed distribution function

In case you're curious about the previous important result:

The derivation of the Jeans escape time begins by considering the **distribution of speed** among molecules, as follows.

- For a gas in thermal equilibrium at temperature *T*, the fraction of molecules of a given species which have with speeds between *v* and *v* + *dv*, *F(v)dv,* is given by the **Maxwell-Boltzmann (MB) distribution function**:

$$F(v)dv = \left(\frac{2}{\pi}\right)^{1/2}\left(\frac{m}{kT}\right)^{3/2} v^2 e^{-mv^2/(2kT)}dv$$

Derived for you in PHYS 143, PHYS 227

where

m = mass of a particular molecule

v = speed of molecules of that type

Not on homework or exams.

Maxwell-Boltzmann speed distribution function (continued)

- The speed defined by the denominator of the exponent,

$$v_0 = \sqrt{\frac{2kT}{m}}$$

  is that of the most numerous molecules; i.e. the peak of the speed distribution function $F(v)$.

- For many purposes, v_0 can be taken as the **typical speed of molecules**, but a large fraction have higher speeds.

- The escape speed from a planet, $v_e = \sqrt{2GM/R}$, is usually significantly larger than v_0.

  - In Earth's exosphere, for the extreme case of H_2,

$$v_0 = \sqrt{2kT/m} = 2.2 \times 10^5 \text{ cm sec}^{-1}$$

$$v_e = \sqrt{2GM/R} = 1.1 \times 10^6 \text{ cm sec}^{-1}$$

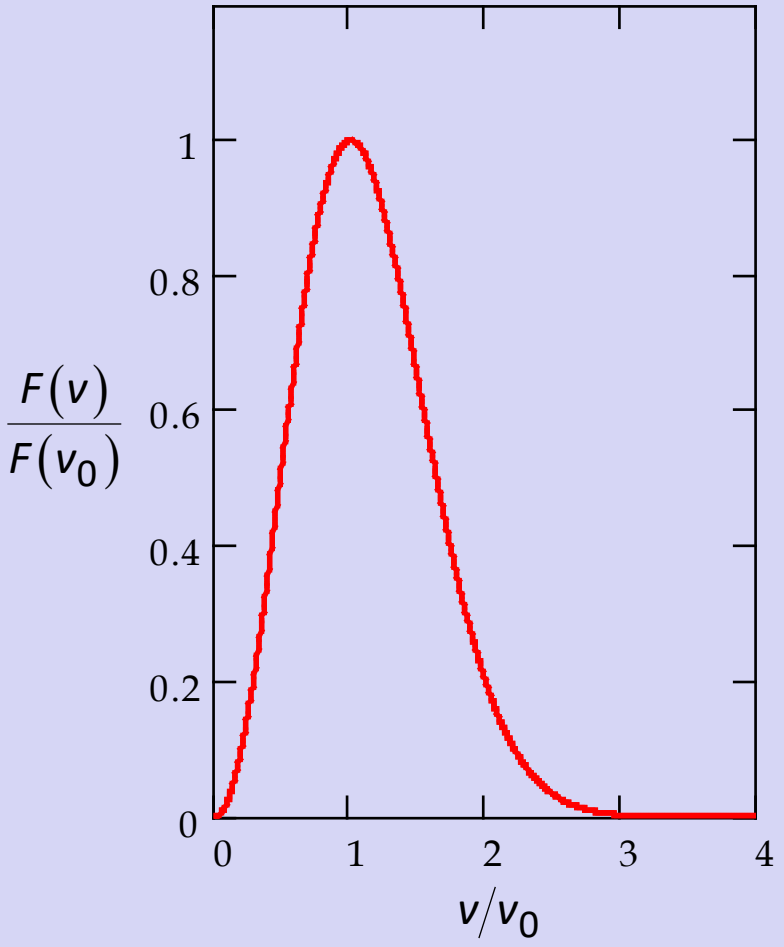

Not on homework or exams.

Maxwell-Boltzmann speed distribution function (continued)

- For gases with multiple species of molecules, the MB distribution applies to each species individually.
- Because of frequent collisions and absorption and reemission of radiation, molecules of different species (different *m*) have different typical speeds but the same typical kinetic energy:

$$\frac{1}{2}m_1v_1^2 = \frac{1}{2}m_2v_2^2$$

  This is called the **equipartition of energy**.

- Thus lighter (heavier) molecules have higher (lower) typical speeds.
- Lighter molecules are more likely to escape a planet's gravity.

Not on homework or exams.

Escape of light molecules from an atmosphere

If a molecule near the top of the atmosphere has $v_{escape} > v_e = \sqrt{2GM/r}$, it will escape from the planet.

- If the number per unit volume of such molecules is n_{escape}, the flux (as usual, number per unit time per unit area) of molecules escaping the planet's gravity is $f_{escape} = n_{escape} v_{escape}$.

- In turn, n_{escape} is related to the total number density of this molecule, n, by the MB distribution:

$$f_{escape} = n_{escape} v_{escape} = n \int_{v_e}^{\infty} v F(v) dv$$

$$= n \left(\frac{2}{\pi} \right)^{1/2} \left(\frac{m}{kT} \right)^{3/2} \int_{v_e}^{\infty} v^3 e^{-mv^2/2kT} dv$$

Substitute $u = v/v_0 = v/\sqrt{2kT/m}$, $u_e = v_e/v_0$:

Not on homework or exams.

Escape of light molecules from an atmosphere (continued)

$$f_{escape} = n\left(\frac{2}{\pi}\right)^{\frac{1}{2}}\left(\frac{m}{kT}\right)^{\frac{3}{2}} v_0^4 \int_{u_e}^{\infty} u^3 e^{-u^2} du = \frac{4nv_0}{\sqrt{\pi}} \int_{u_e}^{\infty} u^3 e^{-u^2} du \quad .$$

- Now substitute $w = u^2$, $dw = 2udu$ and integrate by parts once:

$$\int_{u_e}^{\infty} u^3 e^{-u^2} du = \frac{1}{2}\int_{u_e^2}^{\infty} we^{-w} dw = -\frac{1}{2} we^{-w}\Big|_{u_e^2}^{\infty} + \frac{1}{2}\int_{u_e^2}^{\infty} e^{-w} dw$$

$$= \frac{1}{2} u_e^2 e^{-u_e^2} - \frac{1}{2} e^{-w}\Big|_{u_e^2}^{\infty} = \frac{u_e^2 + 1}{2} e^{-u_e^2}$$

$$f_{escape} = \frac{4nv_0}{\sqrt{\pi}} \frac{u_e^2 + 1}{2} e^{-u_e^2} = \frac{2nv_0}{\sqrt{\pi}} \left(\left[\frac{v_e}{v_0}\right]^2 + 1 \right) e^{-(v_e/v_0)^2}$$

Not on homework or exams.

Escape of light molecules from an atmosphere (continued)

- Since escape velocity is substantially greater than v_0, i.e. $(v_e/v_0)^2 \gg 1$,

$$f_{escape} \cong \frac{2nv_0}{\sqrt{\pi}}\left(\frac{v_e}{v_0}\right)^2 e^{-(v_e/v_0)^2} = \left[\frac{2}{\sqrt{\pi}}\sqrt{\frac{2kT}{m}}\left(\frac{GMm}{kTR}\right)e^{-GMm/kTR}\right]n$$

- The number of molecules of this species in the exosphere is roughly $N = nSH$, where H is the scale height and S is the exosphere's ($\cong$ planet's) surface area.

- In these terms, the rate at which molecules are lost to outer space is

$$\frac{dN}{dt} = SH\frac{dn}{dt} = -f_{escape}S \quad \text{, or}$$

Not on homework or exams.

Escape of light molecules from an atmosphere (continued)

$$\frac{dn}{dt} = -\frac{f_{escape}}{H} = -\left(\frac{m}{kT}\frac{GM}{R^2}\right)\left[\frac{2}{\sqrt{\pi}}\sqrt{\frac{2kT}{m}}\left(\frac{GMm}{kTR}\right)e^{-GMm/kTR}\right]n$$

$$= -\left[\frac{1}{\sqrt{\pi}}\left(\frac{2m}{kT}\right)^{\frac{3}{2}}\left(\frac{G^2M^2}{R^3}\right)e^{-GMm/kTR}\right]n \equiv -\frac{1}{\tau}n$$

- This can be integrated directly:

$$\int_{n_0}^{n}\frac{dn'}{n'} = -\frac{1}{\tau}\int_0^t dt'$$

$$\ln n - \ln n_0 = -\frac{t}{\tau}$$

$$\Rightarrow \quad n(t) = n_0 e^{-t/\tau} \qquad \text{, where } \boxed{\tau = \sqrt{\pi}\left(\frac{kT}{2m}\right)^{\frac{3}{2}}\frac{R^3}{(GM)^2}e^{GMm/kTR}}\ .$$

Not on homework or exams.

Escape of light molecules from an atmosphere (continued)

- Note: when plugging numbers into the exponential term in

$$\tau = \sqrt{\pi}\left(\frac{kT}{2m}\right)^{\frac{3}{2}} \frac{R^3}{(GM)^2} e^{GMm/kTR} \quad ,$$

one can easily get results too large for one's calculator (or even one's computer), as in the table eight pages back.

- In which case, work out the power of ten and a coefficient < 10 by using

$$e^x = 10^{\log(e)x} \cong 10^{0.4343x}$$

One can still work out how to write down the answer, even if the number doesn't fit in the calculator.

Not on homework or exams.